DocuSign Envelope ID: 98289B33-6D3F-4852-B758-AF2BED9C7963

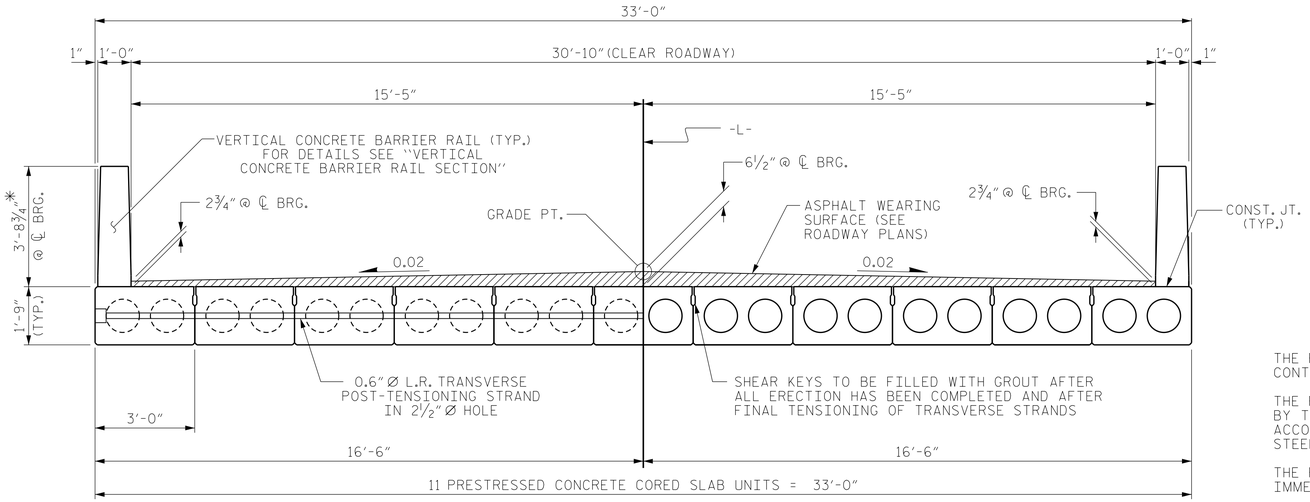

HALF SECTION
AT INTERMEDIATE DIAPHRAGMS

HALF SECTION
THROUGH VOIDS

TYPICAL SECTION

* - THE MAXIMUM BARRIER RAIL HEIGHT AND ASPHALT THICKNESS IS SHOWN. THE HEIGHT OF THE BARRIER RAIL AND ASPHALT THICKNESS VARIES WHILE THE TOP OF THE BARRIER RAIL FOLLOWS THE PROFILE OF THE GUTTERLINE. FOR RAIL HEIGHT DETAILS AND ASPHALT THICKNESS SEE THE "VERTICAL CONCRETE BARRIER RAIL SECTION" DETAIL.

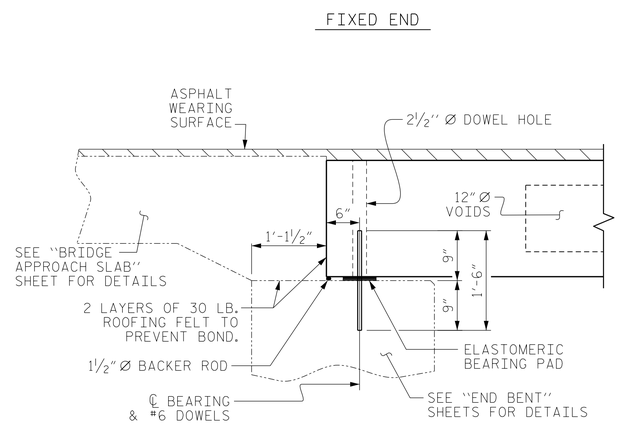

SECTION AT END BENT

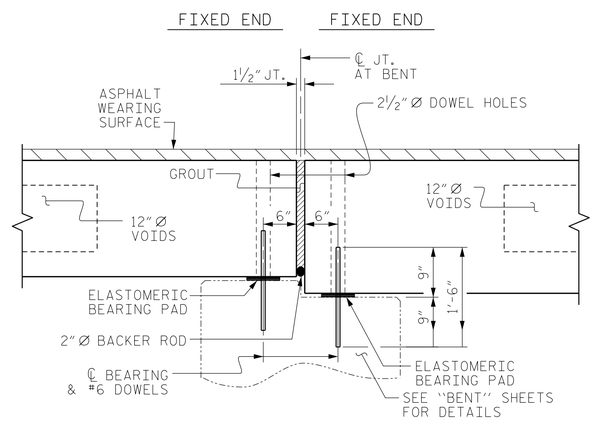

SECTION AT BENT

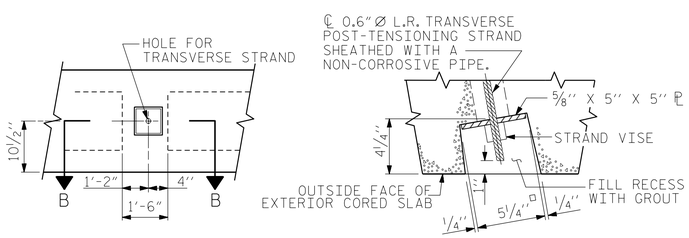

ELEVATION VIEW

SECTION B-B

GROUTED RECESS AT END OF POST-TENSIONED STRAND OF CORED SLABS

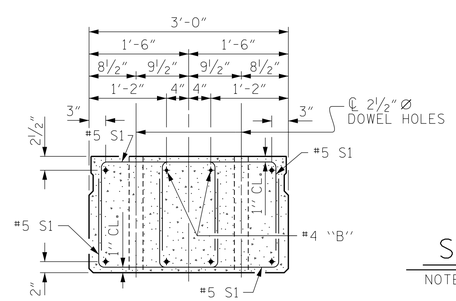

END ELEVATION

SHOWING PLACEMENT OF DOUBLE STIRRUPS AND LOCATION OF DOWEL HOLES. (STRAND LAYOUT NOT SHOWN.) INTERIOR SLAB UNIT SHOWN-EXTERIOR SLAB UNIT SIMILAR EXCEPT SHEAR KEY LOCATION.

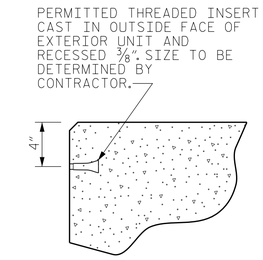

THREADED INSERT DETAIL

THE PERMITTED THREADED INSERTS ARE DETAILED AS AN OPTION FOR THE CONTRACTOR TO ATTACH FALSEWORK AND FORMWORK DURING CONSTRUCTION.

THE PERMITTED THREADED INSERTS IN THE EXTERIOR UNITS SHALL BE SIZED BY THE CONTRACTOR. SPACED AT 4'-0" CENTERS AND GALVANIZED IN ACCORDANCE WITH SECTION 1076 OF THE STANDARD SPECIFICATIONS. STAINLESS STEEL THREADED INSERTS MAY BE USED AS AN ALTERNATE.

THE PERMITTED THREADED INSERTS SHALL BE GROUTED BY THE CONTRACTOR IMMEDIATELY FOLLOWING REMOVAL OF THE FALSEWORK.

THE COST OF THE PERMITTED THREADED INSERTS SHALL BE INCLUDED IN THE PRICE BID FOR PRECAST UNITS.

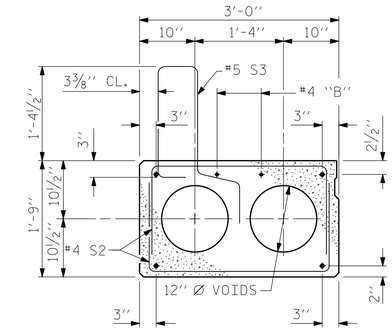

EXT. SLAB SECTION

(FOR PRESTRESSED STRAND LAYOUT, SEE INTERIOR SLAB SECTION.)

◬ BOND SHALL BE BROKEN ON THESE STRANDS FOR A DISTANCE OF 6'-0" FROM END OF CORED SLAB UNIT. SEE STANDARD SPECIFICATIONS, ARTICLE 1078-7.

◉ BOND SHALL BE BROKEN ON THESE STRANDS FOR A DISTANCE OF 2'-0" FROM END OF CORED SLAB UNIT. SEE STANDARD SPECIFICATIONS, ARTICLE 1078-7.

◉ OPTIONAL FULL LENGTH DEBONDED STRANDS. THESE STRANDS ARE NOT REQUIRED. IF THE FABRICATOR CHOOSES TO INCLUDE THESE STRANDS IN THE CORED SLAB UNIT, THE STRANDS SHALL BE DEBONDED FOR THE FULL LENGTH OF THE UNIT AT NO ADDITIONAL COST. SEE STANDARD SPECIFICATIONS, ARTICLE 1078-7.

DEBONDING LEGEND

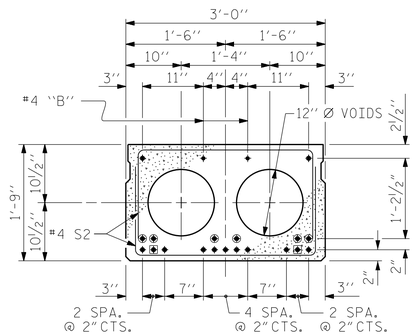

INTERIOR SLAB SECTION
(13 STRANDS REQUIRED)

0.6" Ø LOW RELAXATION STRAND LAYOUT

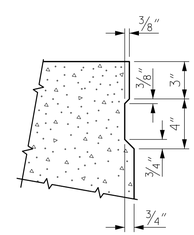

SHEAR KEY DETAIL

NOTE: OMIT SHEAR KEY ON OUTSIDE FACE OF EXTERIOR CORED SLABS.

PROJECT NO. 17BP.9.R.3
DAVIDSON COUNTY
STATION: 12+65.20 -L-

SHEET 1 OF 3

NORTH CAROLINA PROFESSIONAL SEAL 030046 ENGINEER MATTHEW PAYNE
DocuSigned by: 3C4001646A0F4D7...
6/10/2015

STATE OF NORTH CAROLINA
DEPARTMENT OF TRANSPORTATION
RALEIGH

STANDARD
3'-0" X 1'-9"
PRESTRESSED CONCRETE CORED SLAB UNIT
75° SKEW

ATKINS
1616 E. MILLBROOK ROAD, SUITE #310
RALEIGH, NORTH CAROLINA 27609
(919) 876-6888 NCBEES #F-0326

REVISIONS						SHEET NO.
NO.	BY:	DATE:	NO.	BY:	DATE:	S-5
1			3			TOTAL SHEETS
2			4			22

ASSEMBLED BY : C. BLAKES	DATE : 2/13
CHECKED BY : M. PAYNE	DATE : 5/15
DRAWN BY : DGE 5/09	REV. 12/11 MAA/AAC
CHECKED BY : BCH 6/09	

STD. NO. 21" PCS2_33_75S