DocuSign Envelope ID: 98289B33-6D3F-4852-B758-AF2BED9C7963

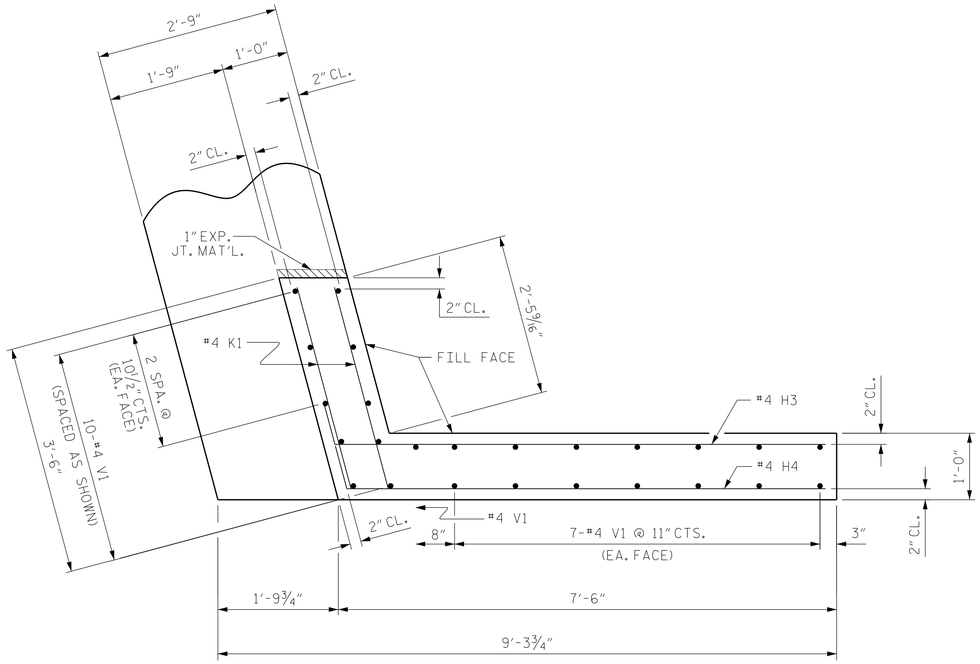

PLAN OF WING (W1)

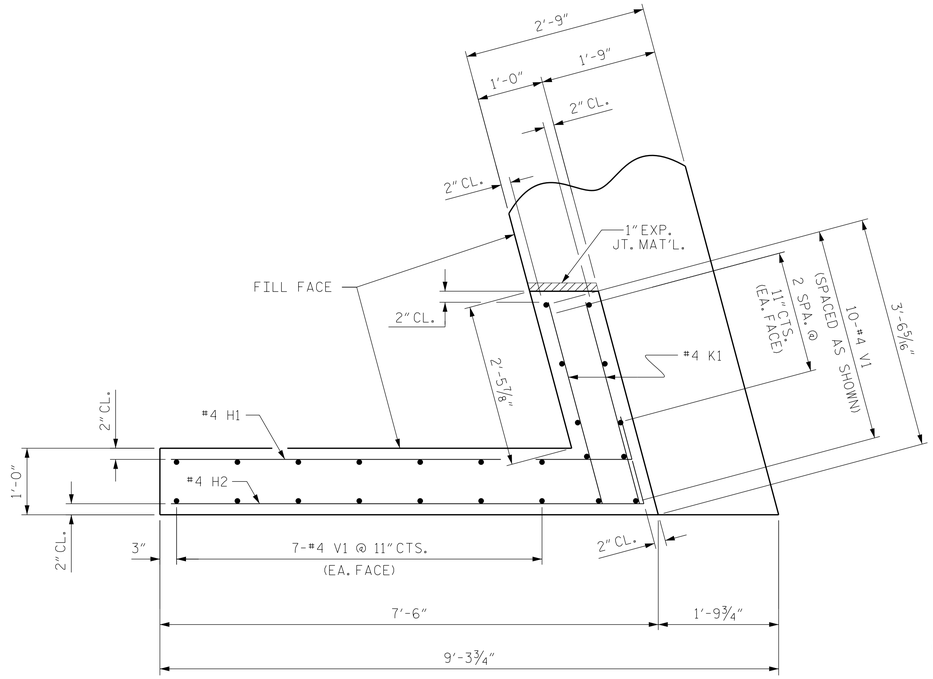

PLAN OF WING (W2)

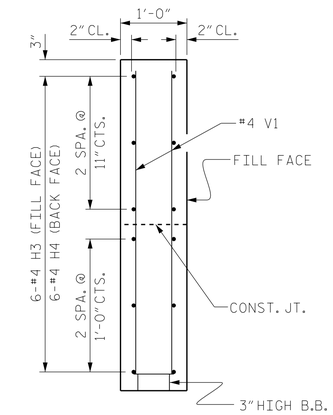

SECTION X-X

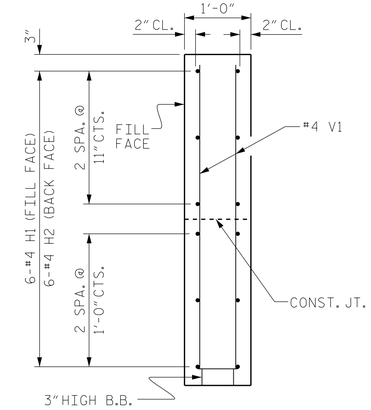

SECTION Y-Y

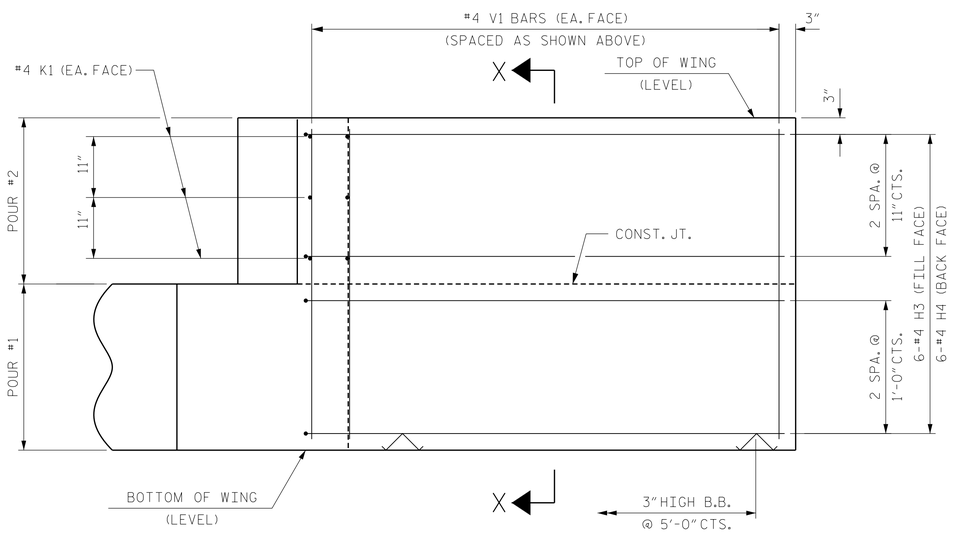

ELEVATION OF WING (W1)

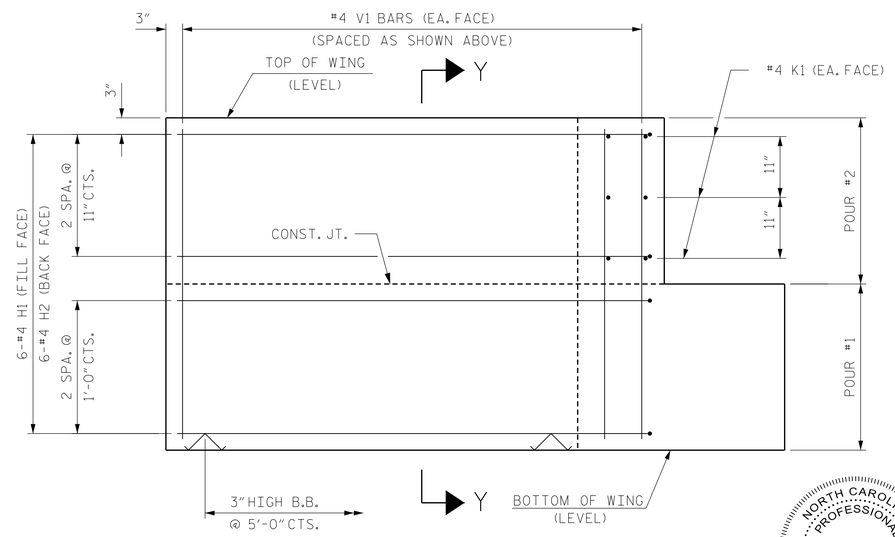

ELEVATION OF WING (W2)

WING DETAILS

PROJECT NO. 17BP.9.R.3

DAVIDSON COUNTY

STATION: 12+65.20 -L-

SHEET 3 OF 4

STATE OF NORTH CAROLINA
DEPARTMENT OF TRANSPORTATION
RALEIGH

SUBSTRUCTURE
END BENT
WING DETAILS

NORTH CAROLINA PROFESSIONAL SEAL 030046 ENGINEER MATTHEW PAYNE

DocuSigned by: 3C4001E46405F4D7... 6/10/2015

ATKINS 1616 E. MILLBROOK ROAD, SUITE #310 RALEIGH, NORTH CAROLINA 27609 (919) 876-6888 NCBEES #F-0326

ASSEMBLED BY : C. BLAKES	DATE : 2/13
CHECKED BY : M. PAYNE	DATE : 5/15
DRAWN BY : CVC 6/10	
CHECKED BY : DNS 6/10	

REVISIONS						SHEET NO.
NO.	BY:	DATE:	NO.	BY:	DATE:	S-14
1			3			TOTAL SHEETS
2			4			22

STD. NO. EB_33_75S