DocuSign Envelope ID: 98289B33-6D3F-4852-B758-AF2BED9C7963

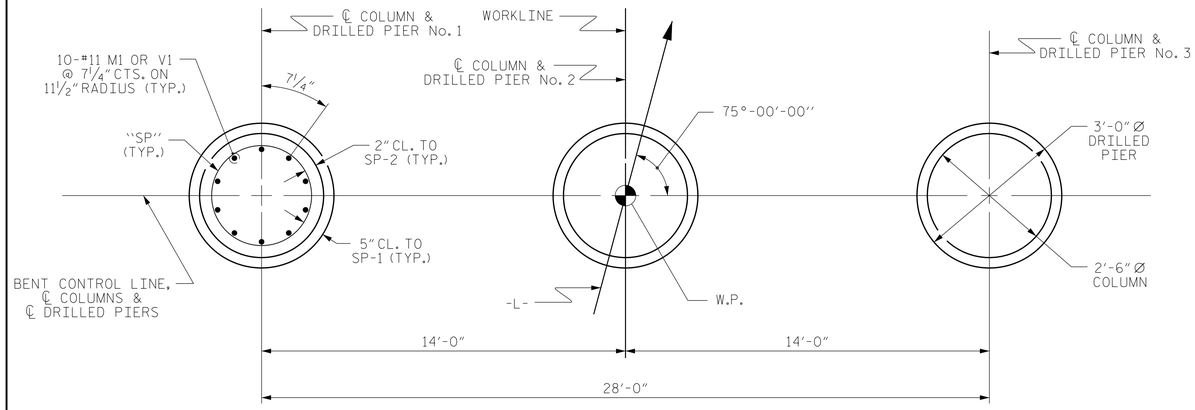

PLAN OF DRILLED PIERS & COLUMNS

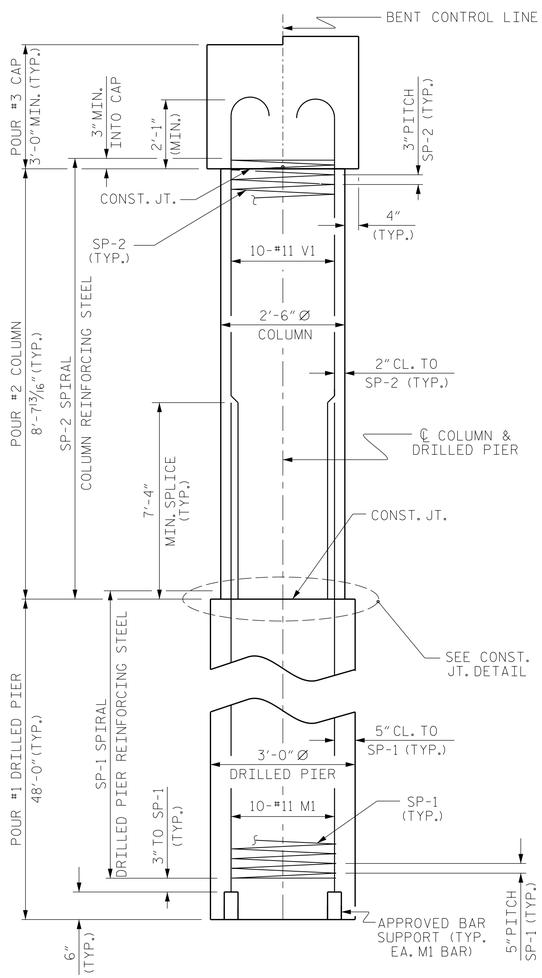

END ELEVATION

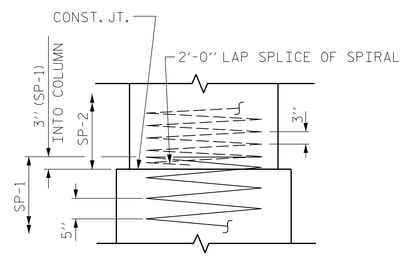

CONSTRUCTION JOINT DETAIL

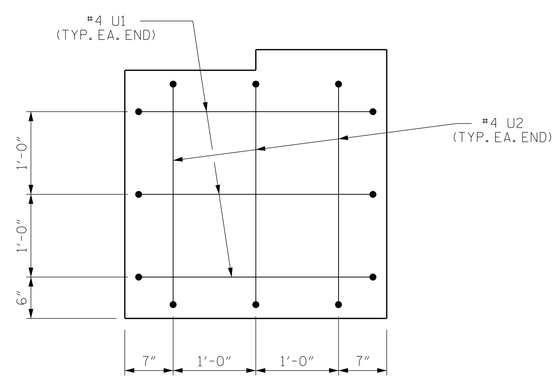

END OF CAP VIEW

(TYPICAL BOTH ENDS)

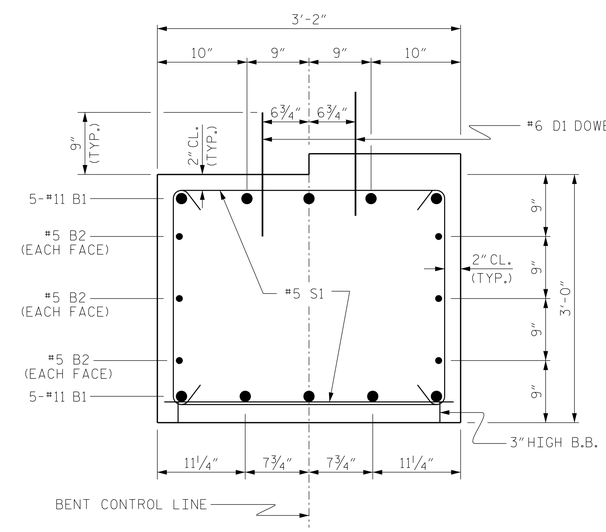

SECTION THRU CAP

BAR TYPES

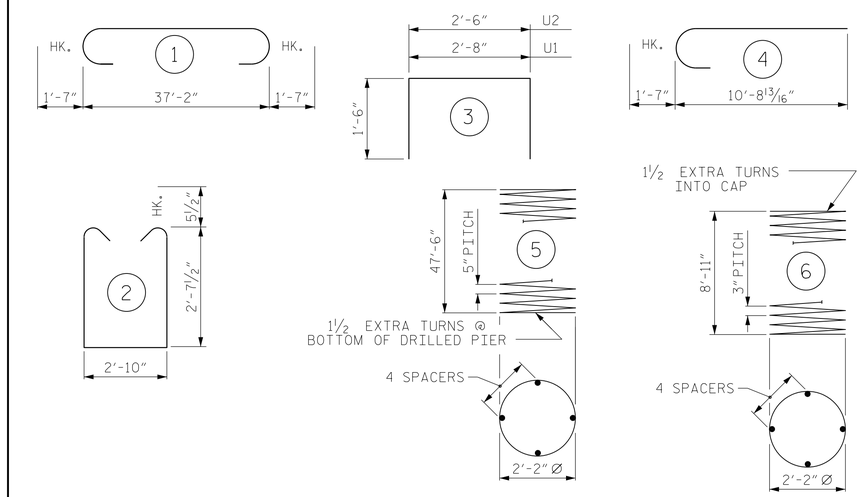

ALL BAR DIMENSIONS ARE OUT TO OUT

BILL OF MATERIAL
FOR ONE BENT

BAR	NO.	SIZE	TYPE	LENGTH	WEIGHT
B1	10	#11	1	40'-4"	2143
B2	6	#5	STR	37'-4"	234
D1	44	#6	STR	1'-6"	99
M1	30	#11	STR	54'-10"	8735
S1	64	#5	2	9'-0"	601
U1	6	#4	3	5'-8"	23
U2	6	#4	3	5'-6"	22
V1	30	#11	4	12'-4"	1965

REINFORCING STEEL (FOR ONE BENT) 13822 LBS.

SP-1	3	✳	5	786'-2"	2455
SP-2	3	✳✳	6	253'-0"	1140

SPIRAL COLUMN REINFORCING STEEL (FOR ONE BENT) 3595 LBS.

✳ THE SP-1 SPIRAL REINFORCING STEEL SHALL BE W31 OR D-31 COLD DRAWN WIRE OR #5 PLAIN OR DEFORMED BAR

✳✳ THE SP-2 SPIRAL REINFORCING STEEL SHALL BE W20 OR D-20 COLD DRAWN WIRE OR #4 PLAIN OR DEFORMED BAR

CLASS A CONCRETE BREAKDOWN (FOR ONE BENT)

POUR #2 (COLUMNS)	4.7 C.Y.
POUR #3 (CAP)	13.8 C.Y.
TOTAL CLASS A CONCRETE	18.5 C.Y.

DRILLED PIERS: (FOR ONE BENT)

DRILLED PIER CONCRETE	
POUR #1 (DRILLED PIERS)	37.7 C.Y.
3'-0" Ø DRILLED PIER NOT IN SOIL	27 LIN. FT.
3'-0" Ø DRILLED PIER IN SOIL	117 LIN. FT.
PERMANENT STEEL CASING FOR 3'-0" Ø DRILLED PIER	0 LIN. FT.
CSL TUBES	576 LIN. FT.

PROJECT NO. 17BP.9.R.3

DAVIDSON COUNTY

STATION: 12+65.20 -L-

SHEET 2 OF 2

STATE OF NORTH CAROLINA
DEPARTMENT OF TRANSPORTATION
RALEIGH

SUBSTRUCTURE
BENT No. 2
DETAILS

NORTH CAROLINA PROFESSIONAL SEAL 030046 ENGINEER MATTHEW PAYNE

DocuSigned by: 3CA001646A0F4D7... 6/10/2015

ASSEMBLED BY : C. BLAKES		DATE : 2/13	
CHECKED BY : M. PAYNE		DATE : 5/15	
DRAWN BY : DGE	3/10	REV. 11/14	MAA/TMG
CHECKED BY : MKT	3/10		

ATKINS 1616 E. MILLBROOK ROAD, SUITE #310 RALEIGH, NORTH CAROLINA 27609 (919) 876-6888 NCBEES #F-0326

REVISIONS						SHEET NO.
NO.	BY:	DATE:	NO.	BY:	DATE:	S-19
1			3			TOTAL SHEETS
2			4			22

STD. NO. DP_BT_33_75S_<50'