DocuSign Envelope ID: 98289B33-6D3F-4852-B758-AF2BED9C7963

PROJECT REFERENCE NO.	SHEET NO.
17BP.9.R.3	2
ROADWAY DESIGN ENGINEER	PAVEMENT DESIGN ENGINEER

NORTH CAROLINA PROFESSIONAL SEAL 024929 ENGINEER CLINTON J. MORGAN

DocuSigned by: Clinton J. Morgan 6/10/2015
EC9B030481064B6...

PAVEMENT SCHEDULE

C1	PROP. APPROX. 1.5″ ASPHALT CONCRETE SURFACE COURSE, TYPE S9.5B, AT AN AVERAGE RATE OF 168 LBS. PER SQ. YD.
C2	PROP. APPROX. 3″ ASPHALT CONCRETE SURFACE COURSE, TYPE S9.5B, AT AN AVERAGE RATE OF 168 LBS. PER SQ. YD. IN EACH OF TWO LAYERS.
C3	PROP. VAR. DEPTH ASPHALT CONCRETE SURFACE COURSE, TYPE S9.5B, AT AN AVERAGE RATE OF 112 LBS. PER SQ. YD. PER 1″ DEPTH. TO BE PLACED IN LAYERS NOT TO EXCEED 2″ IN DEPTH.
D1	PROP. APPROX. 2.5″ ASPHALT CONCRETE INTERMEDIATE COURSE, TYPE I19.0B, AT AN AVERAGE RATE OF 285 LBS. PER SQ. YD.
D2	PROP. VAR. DEPTH ASPHALT CONCRETE INTERMEDIATE COURSE, TYPE I19.0B, AT AN AVERAGE RATE OF 114 LBS. PER SQ. YD. PER 1″ DEPTH, TO BE PLACED IN LAYERS NOT LESS THAN 2.5″ IN DEPTH OR GREATER THAN 4″ IN DEPTH.
E1	PROP. APPROX. 4″ ASPHALT CONCRETE BASE COURSE, TYPE B25.0B, AT AN AVERAGE RATE OF 456 LBS. PER SQ. YD.
E2	PROP. VAR. DEPTH ASPHALT CONCRETE BASE COURSE, TYPE B25.0B, AT AN AVERAGE RATE OF 114 LBS. PER SQ. YD. PER 1″ DEPTH, TO BE PLACED IN LAYERS NOT LESS THAN 4″ IN DEPTH OR GREATER THAN 5.5″ IN DEPTH.
R1	PROP. CONCRETE SHOULDER BERM GUTTER
T	EARTH MATERIAL
U	EXISTING PAVEMENT
W	VARIABLE DEPTH ASPHALT PAVEMENT (SEE WEDGING DETAIL)

NOTE: PAVEMENT EDGE SLOPES ARE 1:1 UNLESS SHOWN OTHERWISE.

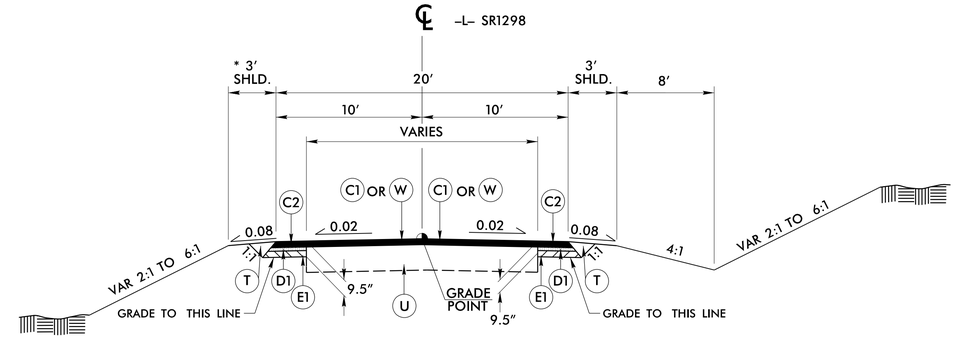

* 7′ SHOULDER WHERE GUARDRAIL IS REQUIRED.

TYPICAL SECTION NO. 1

USE TYPICAL SECTION NO. 1 AS FOLLOWS:
–L– STA. 10+00.00 TO STA. 10+75 +/–
–L– STA. 13+75 +/– TO STA. 15+48.59

NOTE:
TRANSITION FROM EXIST. TO T.S. NO. 1
–L– STA. 10+00.00 TO –L– STA. 10+25.00
–L– STA. 15+23.59 TO –L– STA. 15+48.59

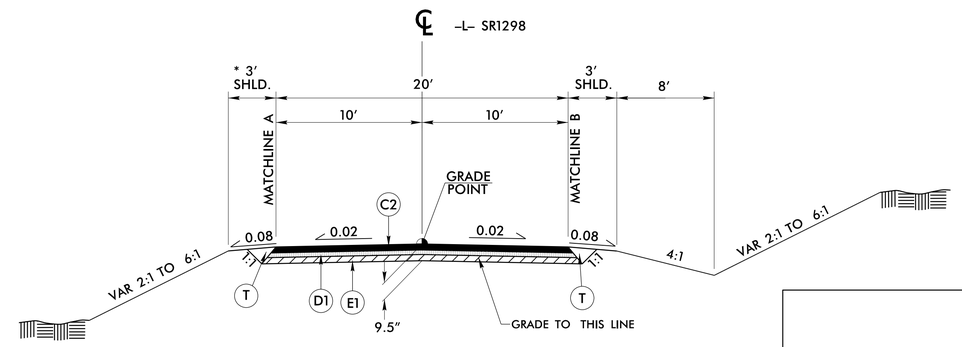

* 7′ SHOULDER WHERE GUARDRAIL IS REQUIRED.

TYPICAL SECTION NO. 2

USE TYPICAL SECTION NO. 2 AS FOLLOWS:
–L– STA. 10+75+/– TO STA. 11+88.91 (BEGIN BRIDGE)
–L– STA. 13+41.49 (END BRIDGE) TO STA. 13+75 +/–

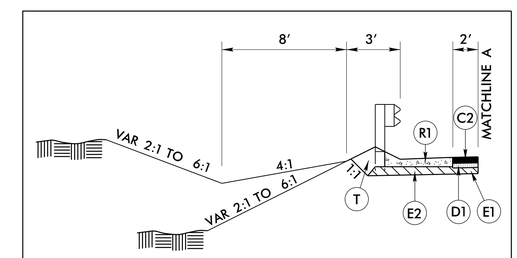

INSET 1

USE TYPICAL WITH SECTION NO. 2
–L– STA. 11+40.00 TO STA. 11+75.00

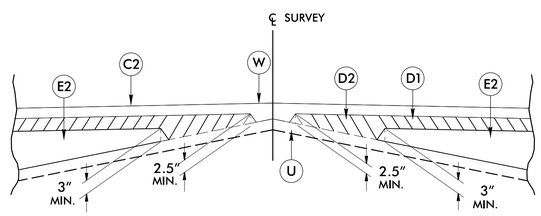

Detail Showing Method of Wedging

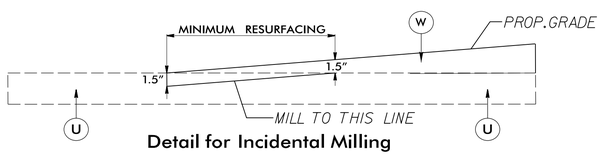

Detail for Incidental Milling

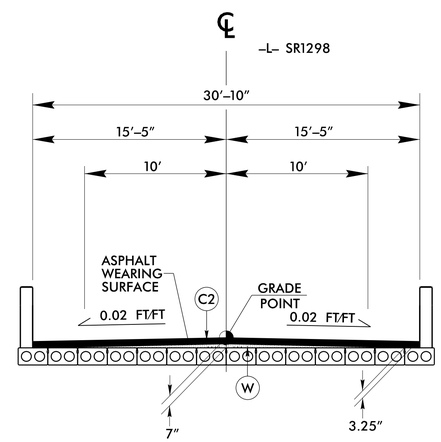

TYPICAL SECTION ON STRUCTURE

–L– STA. 11+88.91 TO STA. 13+41.49

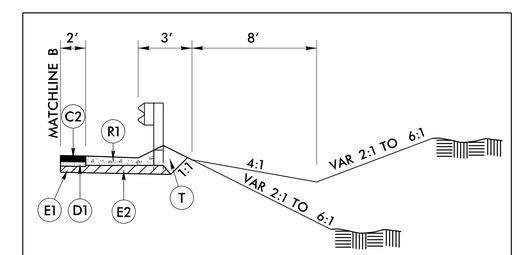

INSET 2

USE TYPICAL WITH SECTION NO. 2
–L– STA. 10+75.00 TO STA. 11+82.00

21-MAY-2015 11:06
R:\Roadway\Proj\280040_Rdy_typ.dgn
$$$$USERNAME$$$$