DocuSign Envelope ID: 98289B33-6D3F-4852-B758-AF2BED9C7963

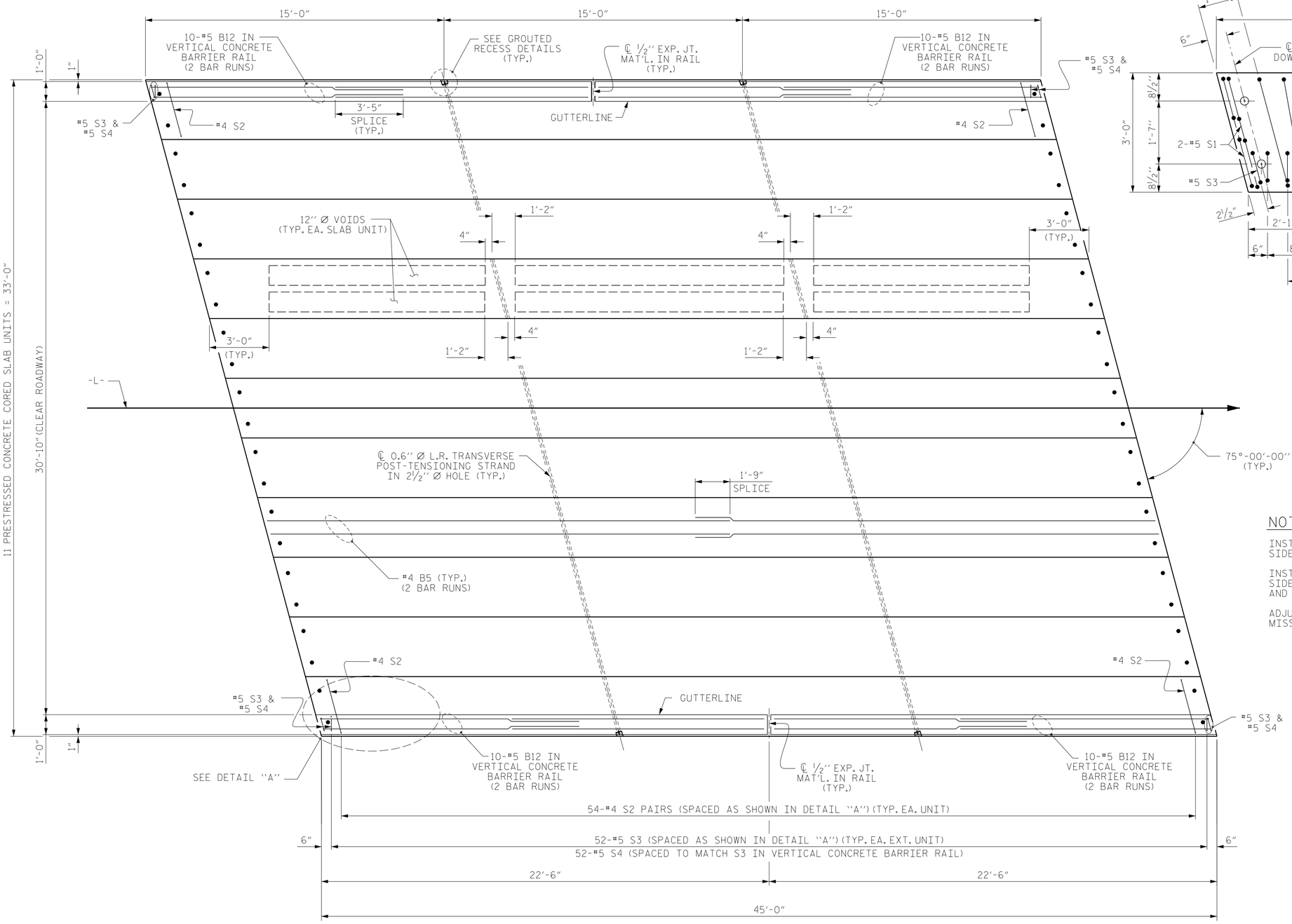


PLAN OF UNIT

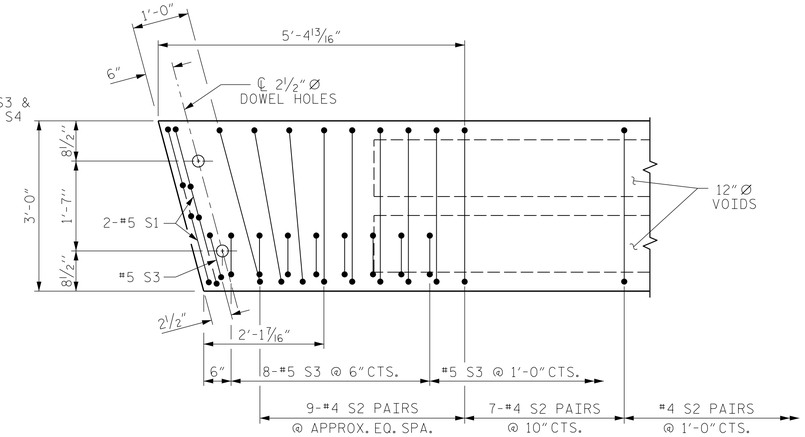


DETAIL "A"

NOTE: EXTERIOR UNIT SHOWN - INTERIOR UNIT SIMILAR EXCEPT OMIT #5 S3 BARS.

NOTES:

INSTALL 8" WIDE X 7 1/4" HIGH DRAINAGE OPENING ON LEFT SIDE OF BARRIER AT STATION 11+91, 12+01, 12+21 AND 12+96.

INSTALL 8" WIDE X 7 1/4" HIGH DRAINAGE OPENING ON RIGHT SIDE OF BARRIER AT STATION 12+00, 12+10, 12+20, 12+30 AND 13+05.

ADJUST VERTICAL CONCRETE BARRIER RAIL REINFORCEMENT TO MISS DRAINAGE OPENINGS.

PROJECT NO. 17BP.9.R.3

DAVIDSON COUNTY

STATION: 12+65.20 -L-

SHEET 2 OF 3

STATE OF NORTH CAROLINA
DEPARTMENT OF TRANSPORTATION
RALEIGH

PLAN OF 45' UNIT
30'-10" CLEAR ROADWAY
75° SKEW

NORTH CAROLINA PROFESSIONAL SEAL 030046 ENGINEER MATTHEW PAYNE

DocuSigned by: 3C4001646402F4D7... 6/10/2015

ATKINS 1616 E. MILLBROOK ROAD, SUITE #310 RALEIGH, NORTH CAROLINA 27609 (919) 876-6888 NCBEES #F-0326

| REVISIONS | | | | | | SHEET NO. |
|---|---|---|---|---|---|---|
| NO. | BY: | DATE: | NO. | BY: | DATE: | S-6 |
| 1 | | | 3 | | | TOTAL SHEETS |
| 2 | | | 4 | | | 22 |

| | |
|---|---|
| ASSEMBLED BY : C. BLAKES | DATE : 2/13 |
| CHECKED BY : M. PAYNE | DATE : 5/15 |
| DRAWN BY : DGE 3/09 | REV. 12/5/11 MAA/AAC |
| CHECKED BY : BCH 3/09 | |

STD. NO. 21" PCS_33_75S_45L