DocuSign Envelope ID: 98289B33-6D3F-4852-B758-AF2BED9C7963

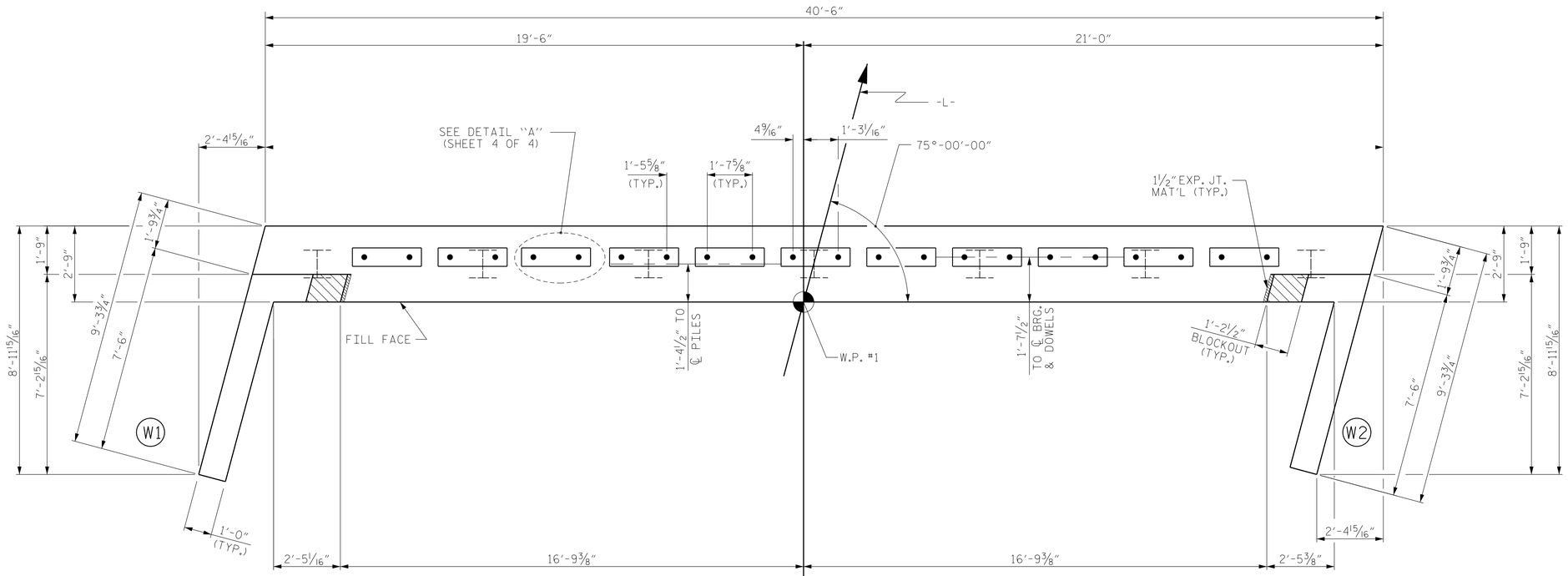

PLAN

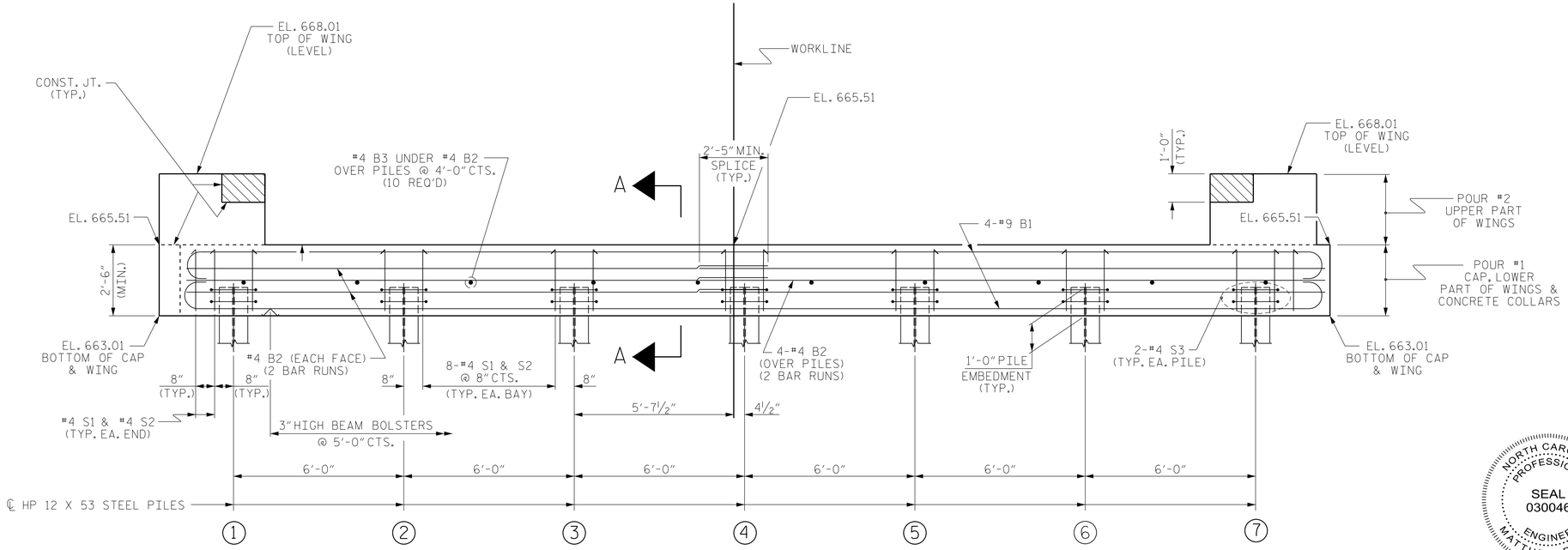

ELEVATION

WINGS NOT SHOWN FOR CLARITY.
FOR SECTION A-A, SEE SHEET 4 OF 4.
CONCRETE COLLARS FOR STEEL PILES NOT SHOWN IN PLAN AND ELEVATION VIEWS FOR CLARITY.
SEE "CORROSION PROTECTION FOR STEEL PILES DETAIL", SHEET 4 OF 4.

NOTES

STIRRUPS IN CAP MAY BE SHIFTED AS NECESSARY TO CLEAR DOWELS.

THE LATERAL GUIDES ARE NOT TO BE POURED UNTIL AFTER THE CORED SLAB UNITS ARE IN PLACE.

THE CONCRETE IN THE SHADED AREA OF THE WING SHALL BE POURED AFTER THE VERTICAL CONCRETE BARRIER RAIL IS CAST IF SLIP FORMING IS USED.

FOR PILE SPLICE DETAILS, SEE SHEET 4 OF 4.

FOR WING DETAILS, SEE SHEET 3 OF 4.

THE CONTRACTOR HAS THE OPTION TO OMIT THE LATERAL GUIDE IF APPROVED BY THE ENGINEER.

PROJECT NO. 17BP.9.R.3
DAVIDSON COUNTY
STATION: 12+65.20 -L-

SHEET 1 OF 4

STATE OF NORTH CAROLINA
DEPARTMENT OF TRANSPORTATION
RALEIGH

SUBSTRUCTURE

END BENT No. 1

NORTH CAROLINA PROFESSIONAL SEAL 030046 ENGINEER MATTHEW PAYNE
DocuSigned by: 5C4D01A4A6F4DF... 6/10/2015

ASSEMBLED BY : C. BLAKES	DATE : 2/13
CHECKED BY : M. PAYNE	DATE : 5/15
DRAWN BY : CVC	6/10
CHECKED BY : DNS	6/10

ATKINS
1616 E. MILLBROOK ROAD, SUITE #310
RALEIGH, NORTH CAROLINA 27609
(919) 876-6888 NCBEES #F-0326

REVISIONS							
NO.	BY:	DATE:	NO.	BY:	DATE:	SHEET NO.	S-12
1			3			TOTAL SHEETS	22
2			4				

STD. NO. EB_33_75S